CARYSIL

Technical Specification

EA08-90

Easy Single Bowl & Drainer Inset Steel Sink



Features

- Lifetime Warranty. T&C's Apply
- UKCA & CE Approved.
- 965mm x 500mm overall size, 160mm deep main bowl
- Reversible drainer design
- SS304 (0.5mm) steel
- Supplied complete with waste, hygienic overflow and fitting clips
- Minimum cabinet width required 600mm
- Waste disposal compatible
- Hot water tap compatible

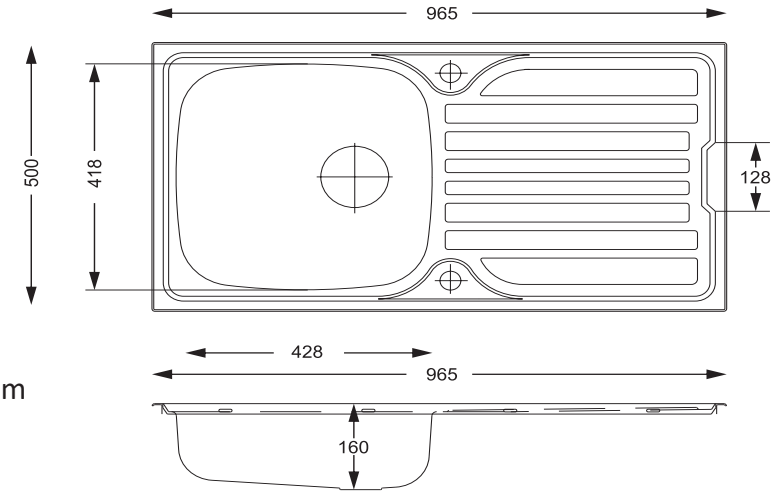

Compatible Waste Kit

UKH51

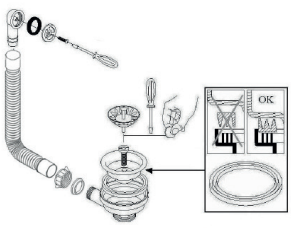

Compatible Plumbing Kits

UKH039

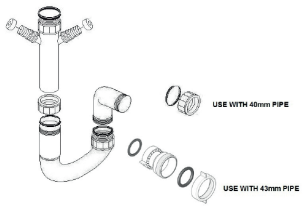

UKH060

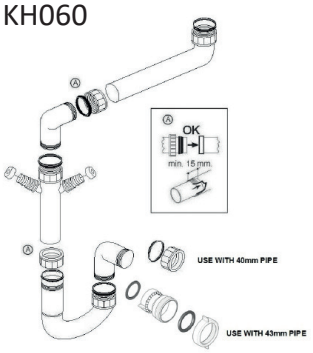

UK CA CE

All dimensions are subject to change without notice. Please check the actual product for exact measurements. No liability will be accepted for incorrect or out of date measurements

Carysil Products Ltd, Lower Washford Mill, Mill Street, Buglawton, Congleton, Cheshire. CW12 2AD